EMI Consideration

Suggested filter to comply with EN 55032 Conducted and Radiated Emissions Class A limits

Single output models

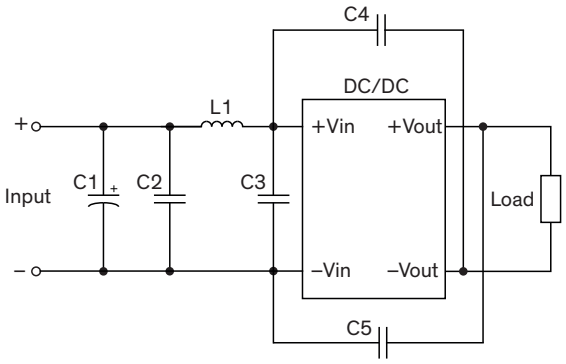

PCB layout suggestion

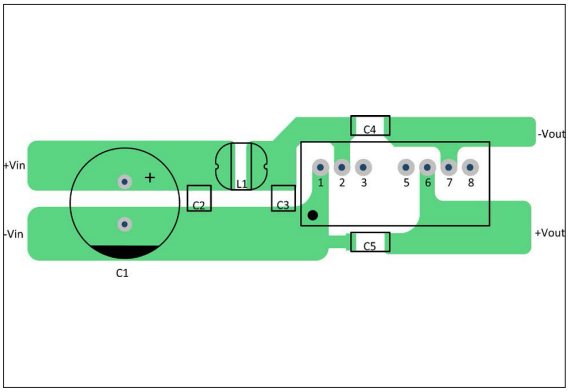

Dual output models

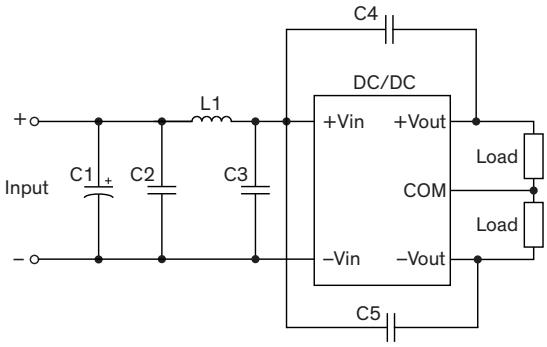

PCB layout suggestion

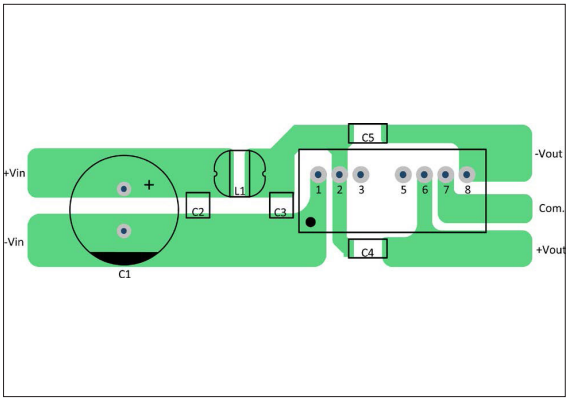

Suggested components to comply with EN 55032 Conducted and Radiated Emissions Class A limits

Model	C1	C2	L1	C3	C4, C5
TMR 4-121x	330 µF / 50 V chemi-con KY	4.7 µF / 25 V 1210 X5R	68 µH / 0.64 A 744774168	4.7 µF / 25 V 1210 X5R	220 pF / 2 kV 1808 X7R
TMR 4-122x	330 µF / 50 V chemi-con KY	4.7 µF / 25 V 1210 X5R	10 µH / 1.7 A 7447745100	4.7 µF / 25 V 1210 X5R	220 pF / 2 kV 1808 X7R
TMR 4-241x	330 µF / 80 V chemi-con KY	4.7 µF / 50 V 1210 X5R	68 µH / 0.64 A 744774168	4.7 µF / 50 V 1210 X5R	220 pF / 2 kV 1808 X7R
TMR 4-242x	330 µF / 80 V chemi-con KY	4.7 µF / 50 V 1210 X5R	4.7 µH / 1.82 A 744773047	4.7 µF / 50 V 1210 X5R	220 pF / 2 kV 1808 X7R
TMR 4-481x	330 µF / 100 V chemi-con KY	4.7 µF / 100 V 1210 X5R	100 µH / 0.57 A 74477420	4.7 µF / 100 V 1210 X5R	220 pF / 2 kV 1808 X7R
TMR 4-482x	330 µF / 100 V chemi-con KY	4.7 µF / 100 V 1210 X5R	4.7 µH / 1.82 A 744773047	4.7 µF / 100 V 1210 X5R	220 pF / 2 kV 1808 X7R

Suggested filter to comply with EN 55032 Conducted and Radiated Emissions Class B limits

Single output models

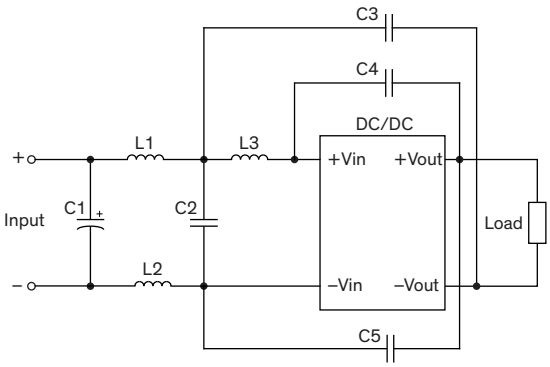

PCB layout suggestion

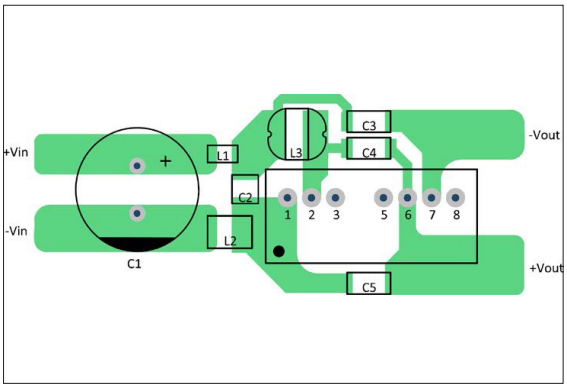

Dual output models

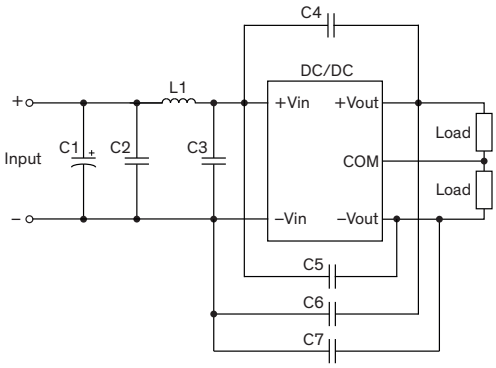

PCB layout suggestion (Top view)

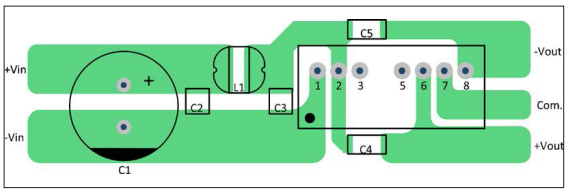

PCB layout suggestion (Bottom view)

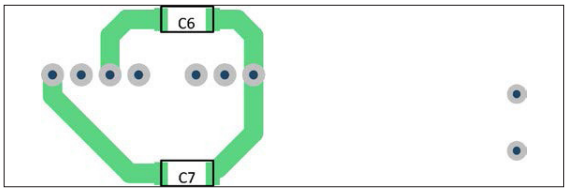

Suggested components to comply with EN 55032 Conducted and Radiated Emissions Class B limits

Model	C1	L1	L2	C2	L3	C3	C4, C5	C6, C7
TMR 4-121x	330 µF / 50 V chemi-con KY	4 A 74279252	4 A 74279252	22 µF / 25 V 1206 X5R	68 µH / 0.64 A 744774168	220 pF / 2 kV 1808 X7R	220 pF / 2 kV 1808 X7R	-
TMR 4-122x	330 µF / 50 V chemi-con KY	10 µH / 1.7A 744745100	-	4.7 µF / 25 V 1210 X5R	-	4.7 µF / 25 V 1210 X5R	220 pF / 2 kV 1808 X7R	220 pF / 2 kV 1808 X7R
TMR 4-241x	330 µF / 80 V chemi-con KY	0.5 A 742792133	4 A 74279252	10 µF / 50 V 1206 X5R	68 µH / 0.64 A 744774168	220 pF / 2 kV 1808 X7R	220 pF / 2 kV 1808 X7R	-
TMR 4-242x	330 µF / 80 V chemi-con KY	4.7 µH / 1.82 A 744773047	-	4.7 µF / 50 V 1210 X5R	-	4.7 µF / 50 V 1210 X5R	220 pF / 2 kV 1808 X7R	220 pF / 2 kV 1808 X7R
TMR 4-481x	330 µF / 100 V chemi-con KY	0.5 A 742792133	4 A 74279252	4.7 µF / 100 V 1210 X5R	100 µH / 0.57 A 744774168	220 pF / 2 kV 1808 X5R	220 pF / 2 kV 1808 X7R	-
TMR 4-482x	330 µF / 100 V chemi-con KY	4.7 µH / 1.82 A 744773047	-	4.7 µF / 100 V 1210 X5R	-	4.7 µF / 100 V 1210 X5R	220 pF / 2 kV 1808 X7R	220 pF / 2 kV 1808 X7R

© Copyright 2020 Traco Electronic AG
Specifications can be changed without notice!